卷册检索号 SEARCH NO. OF THE VOLUME
MLHVDC-LCS-ECI-DD-EC-0404 30-B003701S-D0404

第 1 页 PAGE 1　　共 1 页 OF 1

图纸文件目录（首页）

CATALOG OF DRAWING DOCUMENTS (HEAD PAGE)

拉合尔±660kV换流站 工程 PROJECT　施工图 阶段 DESIGN STAGE
±660kV Lahore Converter Station　Detail Design

电气 专业 第 04 卷 第 04 册
Electrical SPECIALITY VOLUME 04 BOOK 04

卷册名称 Volume name：直击雷防护布置图——直流场与换流区域
Direct Lightning Stroke Shielding Layout - DC Yard and Converter Area

批准 APPROVED BY	2019.04.18
审核 REVIEWED BY	
设计/勘测 DESIGNED BY/ SURVEYED BY	2019.04.18
图纸 8 张 DRAWING 8 NOS.	打印件 0 本 PRINTED COPIES 0 NOS.

序号 No.	图号 DRAWING NO.	文件名称 DOCUMENT TITLE	版本 EDITION	张 NOS.	本 NOS.	备注 REMARKS
1	30-B003701S-D0404-001	卷册说明 Description of drawing	A	1		
2	30-B003701S-D0404-002	直流场与换流区域直击雷防护设施布置图 Direct lightning stroke shielding facilities layout of DC field and converter station area	A	1		
3	30-B003701S-D0404-003	避雷线保护计算结果数据表 Protecting data of shielding wires	A	1		
4	30-B003701S-D0404-004	避雷线安装张力弧垂数据表 Load data of shielding wires	A	1		
5	30-B003701S-D0404-005	避雷线与避雷线塔连接详图 Details of connection between shielding wire and tower	A	1		
6	30-B003701S-D0404-006	阀厅避雷线柱接地布置图 Grounding of shielding posts on valve hall	A	1		
7	30-B003701S-D0404-007	阀厅防雷接地详图 Details of lightning protection and grounding of valve hall	A	1		
8	30-B003701S-D0404-008	材料汇总表 Tables of material	A	1		

注：

卷 册 说 明

1. 本卷册设计范围包括直流场、阀厅及换流区域直击雷防护布置图，阀厅上避雷线柱接地。交流场、交流滤波器场的防雷设计由设计B包负责。
2. 主控楼在避雷线保护范围内，站前区及建维区各建筑物采用避雷带保护，详见各建筑电气卷册。
3. 本卷册的分包划分为：
   电气A包安装单位——直流场、阀厅及换流区域避雷线安装，阀厅避雷线柱的接地引下及与引上点的接口部分。
4. 直流场及换流区域直击雷防护由避雷线构成，直击雷防护设施布置图见本卷册002图。直流场设置双分裂避雷线，避雷线型号为2xGJ-80，避雷线间设置间隔棒，间隔棒间距5m。

Description of drawing

1. This drawing includes direct lightning stroke shielding facilities layout of DC field、valve hall and converter area and grounding of shielding tower on valve hall.
2. The main control building is protected by shielding wires, and the buildings in the front of the station and the construction and maintenance area are protected by shielding wires belts. Detailed information can be found in the volumes of the electrical buildings.
3. Scope of contract:
   Electrical contractor A---shielding wire of DC field、valve hall and converter area, grounding of shielding post on valve hall.
4. Direct lightning stroke shielding of DC field and converter area is made up by shielding wires, the layout of facilities is shown in drawing 002. converter area and valve hall. Double shielding wire named 2xGJ-80 is set in DC yard and spacer is used every 5m.

Reference Drawings

Drwg. No.	Title

Revisions

	Name	Date	Notes

巴基斯坦默蒂亚里—拉合尔±660kV直流输电工程

±660kV HVDC Project from Matiari to Lahore in Pakistan

NATIONAL TRANSMISSION & DESPATCH COMPANY (NTDC) LIMITED PAKISTAN

CONTRACTOR 国家电网 中国电力技术装备有限公司 CHINA ELECTRIC POWER EQUIPMENT AND TECHNOLOGY CO.,LTD.

SUBCONTRACTOR East China Electric Power Design Institute Co.,Ltd.

拉合尔±660kV换流站

±660kV Lahore Converter Station

设计阶段 PHASE: 施工图 Detail Design

MLHVDC-LCS-ECI-DD-EC-0404-001A

	姓名 Name	日期 Date
设计 Designed	宁贤俊	2019.04.18
校核 Checked	沉斌	2019.04.18
审核 Reviewed	郑煜	2019.04.18
批准 Approved	潘益竿	2019.04.18
比例 Scale		图号 DWG NO.

卷册说明

Description of drawing

30-B003701S-D0404-001

版本 REV. A

A3(420x297)

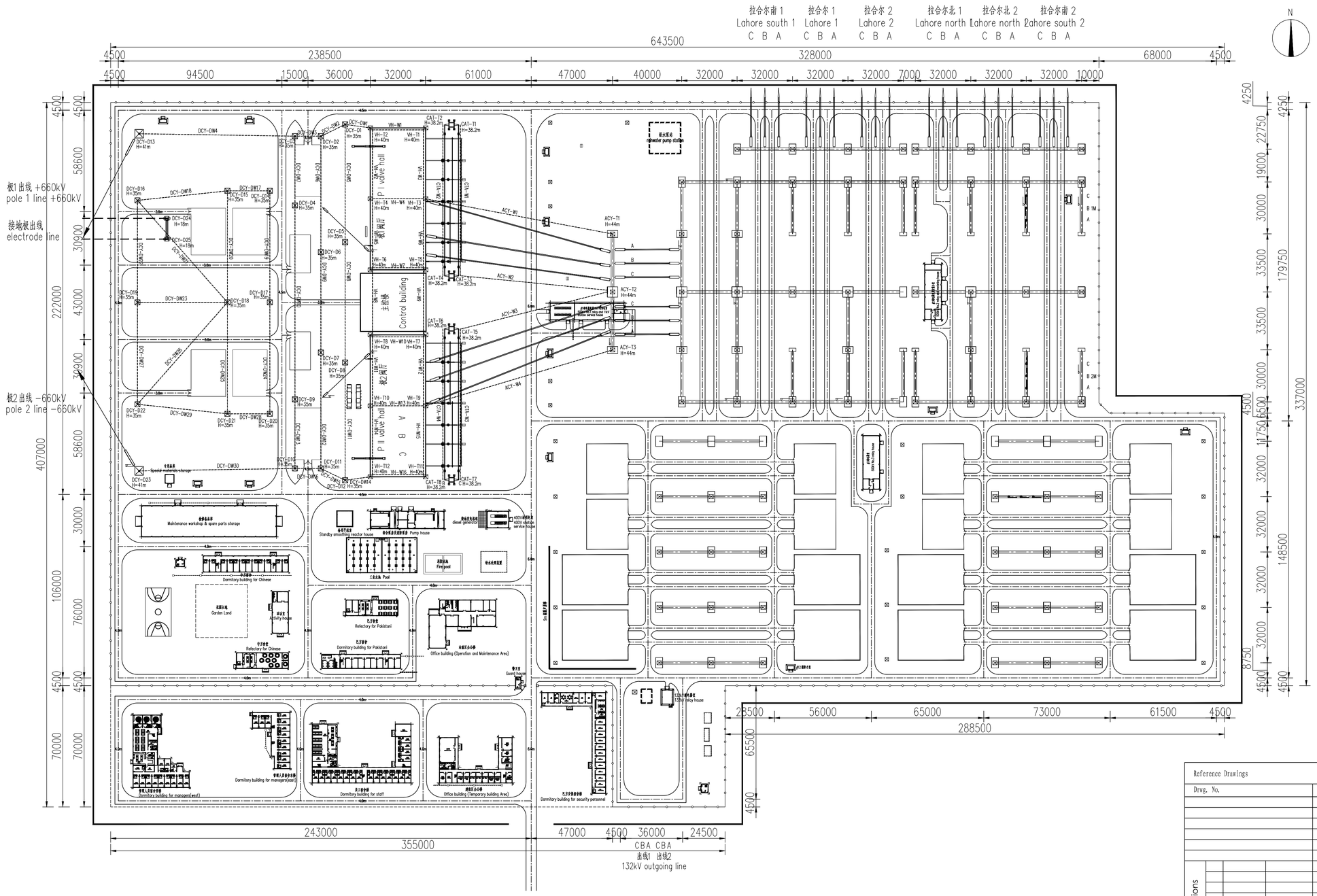

说明：

1.避雷线表示为a−Wb或a−DWb，其中a表示区域，b表示编号，W表示单根避雷线，DW表示双分裂避雷线。以直流场场地标高为0标高。

2.图例：

☒ 构架或阀厅上避雷线柱，a−Tb，其中a表示区域，b表示编号。

☒ 独立避雷线柱，a−Db，其中a表示区域，b表示编号。

-------- 避雷线。

Note:

1. Shielding wire is represented in the form of a−Wb or a−DWb, in which a represents area, b represents NO., W represents single wire while DW represents double wire. Taking DC filed elevation as 0 elevation.

2. Symbols:

☒ shielding post on frame and valve hall, a−Tb−c, in which a stands for area, b stands for NO., c stands for the height of hanging point, the unit is meter.

☒ shielding tower, a−Db−c, in which a stands for area, b stands for NO., c stands for the height of hanging point, the unit is meter.

-------- shielding wire

电气A包安装单位
Electrical contractor A

编号 NO.	名称 Name	型号及规范 Type and Standard	单位 Unit	数量 Quantity	备注 Remarks
1	避雷线 shielding wire	GJ−80	米 m	5500	
2	双分裂间隔棒 double−divided spacer	MRJ−（配合GJ−80导线）/150 MRJ−（fit GJ−80）/150	套 set	360 360	按每5m设一个间隔棒 set spacer every 5m

所在区域 Area	编号 No.	项目内容 Item		数量 Quantity
换流变区域 Converter area	CTA−W1~CTA−W4	避雷线	Shielding wire	4条
	CTA−T1~CTA−T8	构架上避雷线柱	Shielding post on frame	8个
阀厅主控楼区域 valve hall and control building	VH−W1~VH−W16	避雷线	Shielding wire	16条
	VH−T1~VH−T12	阀厅上避雷线柱	Shielding post on valve hall	12个
直流场区域 DC yard	DCY−DW1~DCY−DW30	避雷线	Shielding wire	30条
	DCY−D1~D12、D14~D22	独立避雷线塔	Shielding tower	21个
	DCY−D13、D23~D25	构架上避雷线柱	Shielding post on frame	4个
交流场区域 AC yard	ACY−W1~ACY−W4	避雷线	Shielding wire	4条
	ACY−T1~ACY−T3	构架上避雷线柱	Shielding post on frame	3个

Reference Drawings

Drwg. No.	Title

Revisions

	Name	Date	Notes

巴基斯坦默蒂亚里—拉合尔±660kV直流输电工程
±660kV HVDC Project from Matiari to Lahore in Pakistan

NATIONAL TRANSMISSION & DESPATCH COMPANY (NTDC) LIMITED PAKISTAN

CONTRACTOR 国家电网 State Grid 中国电力技术装备有限公司 CHINA ELECTRIC POWER EQUIPMENT & TECHNOLOGY CO.,LTD.

SUBCONTRACTOR East China Electric Power Design Institute Co.,Ltd.

拉合尔±660kV换流站
±660kV Lahore Converter Station

设计阶段 PHASE: 施工图 Detail Design

M L H V D C - L C S - E C I - D D - E C - 0 4 0 4 - 0 0 2 A

	姓名 Name	日期 Date
设计 Designed	宁雪焕	2019.04.18
校核 Checked	沈斌	2019.04.18
审核 Reviewed	郑煜	2019.04.18
批准 Approved	潘吾竹	2019.04.18
比例 Scale	1:1000	图号 DWG NO. 30−B003701S−D0404−002

直流场与换流区域直击雷防护设施布置图
Direct lightning stroke shielding facilities layout of DC field and converter station area

版本 REV. A

594X841

表一：直流场区域避雷线计算结果
Table 1: Shielding wire in DC yard

序号 NO.	避雷线联合保护 Shielding combination	避雷线高度 Shielding height(m)	配合电流(kA) Cooperate current(kA)	雷电流击距(m) Rolling sphere radius(m)	保护范围最低点高度(m) Lowest point	设备高度(m) Highest point of protected area
1	DCY-DW5、VH-W2/DCY-DW11、VH-W14	35	2	12.55	30.69	(15m阀厅极线套管)
2	DCY-DW5、DW8、VH-W5/DCY-DW8、DW11、VH-W11	35	2	12.55	30.69	(9.1m阀厅中性线套管) (12m中性线出线)
3	DCY-DW5、DW6/DCY-DW11、DCY-DW12	35	2	12.55	30.87	(16.5m极线管母、12m中性线出线)
4	DCY-DW6、DW7/DCY-DW12、DCY-DW13	35	10	35.73	32.2	(20m极线平波电抗器)
5	DCY-DW6、DW9/DCY-DW10、DCY-DW12	35	5	22.77	30.73	(10m中性线平抗)
6	DCY-DW4、DW7、DW17、DW18/DCY-DW13、DW28、DW29、DW30	35	10	35.73	27.53	(16.5m极线管母)
7	DCY-DW19、DW20/DCY-DW24、DW25	35	10	35.73	30.83	(25m直流滤波器电容器)
8	DCY-DW18、DW20、DW21/DCY-DW25、DW26、DW29	35	10	35.73	28.52	(25m直流滤波器电容器)
9	DCY-DW21、DW22、DW23/DCY-DW23、DW26、DW27	35	5	22.77	26.58	(8.6m金属回线)

表二：换流变及阀厅、主控楼区域避雷线计算结果
Table 2: Shielding wire in converter area, valve hall and control building

序号 NO.	避雷线联合保护 Shielding combination	避雷线高度 Shielding height(m)	配合电流(kA) Cooperate current(kA)	雷电流击距(m) Ball radius(m)	保护范围最低点高度(m) Lowest point	设备高度(m) Highest point of protected area
1	CTA-W1、W2/CTA-W3、W4	38.2	10	35.73	35.85	(30.2m母线)
2	VH-W1~16	40	二类建筑物 Type II building	45	35.5	(35m阀厅巡视走道)

表三：交流场区域避雷线计算结果
Table 3: Shielding wire in AC yard

序号 NO.	避雷线联合保护 Shielding combination	避雷线高度 Shielding height(m)	配合电流(kA) Cooperate current(kA)	雷电流击距(m) Ball radius(m)	保护范围最低点高度(m) Lowest point	设备高度(m) Highest point of protected area
1	ACY-W1、W2、VH-W6/ACY-W3、W4、VH-W12	44	10	35.73	37.82	(34m换流变进线)

Reference Drawings

Drwg. No.	Title

Revisions

	Name	Date	Notes

巴基斯坦默蒂亚里—拉合尔±660kV直流输电工程
±660kV HVDC Project from Matiari to Lahore in Pakistan

NATIONAL TRANSMISSION & DESPATCH COMPANY (NTDC) LIMITED PAKISTAN

CONTRACTOR 国家电网 中国电力技术装备有限公司 CHINA ELECTRIC POWER EQUIPMENT AND TECHNOLOGY CO.,LTD.

SUBCONTRACTOR East China Electric Power Design Institute Co.,Ltd.

拉合尔±660kV换流站
±660kV Lahore Converter Station

设计阶段 PHASE: 施工图 Detail Design

M L H V D C - L C S - E C I - D D - E C - 0 4 0 4 - 0 0 3 A

	姓名 Name	日期 Date
设计 Designed	宁雪姣	2019.04.18
校核 Checked	汪斌	2019.04.18
审核 Reviewed	郑煜	2019.04.18
批准 Approved	潘益平	2019.04.18
比例 Scale		图号 DWG NO.

避雷线保护计算结果数据表
Protecting data of shielding wires

30-B003701S-D0404-003

版本 REV. A

A3(420x297)

NO.: XXXX

Distance: XX Sag: XX Height difference: XX Type of shielding wire: XX

Temperature(℃)											
Horizontal tension(kg)											
Sag(m)											

编号: DCY-DW1、14

跨距: 15m 弧垂: 0.8m 高差: 5m 避雷线型号: 2xGJ-80

环境温度(C°)	40	30	20	10	5	0	-10
水平张力(kN)	0.512	0.516	0.52	0.524	0.526	0.529	0.533
导线弧垂(m)	0.808	0.802	0.796	0.789	0.786	0.783	0.776

编号: DCY-DW2~3、15~16

跨距: 15m 弧垂: 0.8m 高差: 0m 避雷线型号: 2xGJ-80

环境温度(C°)	40	30	20	10	5	0	-10
水平张力(kN)	0.487	0.491	0.494	0.498	0.5	0.502	0.506
导线弧垂(m)	0.811	0.805	0.799	0.793	0.79	0.787	0.781

编号: DCY-DW4、30

跨距: 90m 弧垂: 2.5m 高差: 6m 避雷线型号: 2xGJ-80

环境温度(C°)	40	30	20	10	5	0	-10
水平张力(kN)	5.637	5.796	5.966	6.151	6.25	6.353	6.572
导线弧垂(m)	2.421	2.355	2.288	2.219	2.184	2.149	2.077

编号: DCY-DW5~6、8、11~12

跨距: 70m 弧垂: 2m 高差: 0m 避雷线型号: 2xGJ-80

环境温度(C°)	40	30	20	10	5	0	-10
水平张力(kN)	4.251	4.366	4.491	4.626	4.697	4.772	4.932
导线弧垂(m)	1.939	1.888	1.836	1.782	1.755	1.728	1.672

编号: DCY-DW7、13

跨距: 40m 弧垂: 2m 高差: 0m 避雷线型号: 2xGJ-80

环境温度(C°)	40	30	20	10	5	0	-10
水平张力(kN)	1.363	1.375	1.387	1.399	1.406	1.412	1.426
导线弧垂(m)	1.983	1.966	1.948	1.931	1.922	1.913	1.895

编号: DCY-DW9、22、27

跨距: 60m 弧垂: 2m 高差: 0m 避雷线型号: 2xGJ-80

环境温度(C°)	40	30	20	10	5	0	-10
水平张力(kN)	3.1	3.163	3.229	3.299	3.335	3.373	3.453
导线弧垂(m)	1.955	1.917	1.877	1.837	1.817	1.797	1.755

编号: DCY-DW10

跨距: 112m 弧垂: 3m 高差: 0m 避雷线型号: 2xGJ-80

环境温度(C°)	40	30	20	10	5	0	-10
水平张力(kN)	7.265	7.477	7.706	7.954	8.086	8.223	8.516
导线弧垂(m)	2.902	2.82	2.736	2.651	2.608	2.564	2.476

编号: DCY-DW17、28

跨距: 25m 弧垂: 1m 高差: 0m 避雷线型号: 2xGJ-80

环境温度(C°)	40	30	20	10	5	0	-10
水平张力(kN)	0.991	1.004	1.019	1.034	1.042	1.05	1.066
导线弧垂(m)	0.983	0.97	0.956	0.942	0.935	0.928	0.914

编号: DCY-DW18、23、29

跨距: 53m 弧垂: 2m 高差: 0m 避雷线型号: 2xGJ-80

环境温度(C°)	40	30	20	10	5	0	-10
水平张力(kN)	2.408	2.446	2.485	2.526	2.57	2.57	2.615
导线弧垂(m)	1.965	1.935	1.904	1.873	1.858	1.842	1.809

编号: DCY-DW19~20、24~25

跨距: 65m 弧垂: 2m 高差: 0m 避雷线型号: 2xGJ-80

环境温度(C°)	40	30	20	10	5	0	-10
水平张力(kN)	3.652	3.738	3.829	3.928	3.98	4.034	4.148
导线弧垂(m)	1.947	1.903	1.857	1.81	1.787	1.763	1.714

编号: DCY-DW21、26

跨距: 80m 弧垂: 2m 高差: 0m 避雷线型号: 2xGJ-80

环境温度(C°)	40	30	20	10	5	0	-10
水平张力(kN)	5.595	5.788	6	6.234	6.359	6.492	6.778
导线弧垂(m)	1.924	1.86	1.794	1.727	1.693	1.658	1.588

编号: VH-W1、4、7、10、13、16

跨距: 32m 弧垂: 1m 高差: 0m 避雷线型号: GJ-80

环境温度(C°)	40	30	20	10	5	0	-10
水平张力(kN)	0.824	0.844	0.865	0.887	0.899	0.911	0.938
导线弧垂(m)	0.977	0.954	0.931	0.908	0.896	0.884	0.859

编号: VH-W2、3、5、6、8、9、11、12、14、15

跨距: 40m 弧垂: 1m 高差: 0m 避雷线型号: GJ-80

环境温度(C°)	40	30	20	10	5	0	-10
水平张力(kN)	1.306	1.356	1.421	1.475	1.51	1.547	1.63
导线弧垂(m)	0.96	0.925	0.888	0.85	0.83	0.81	0.769

编号: CTA-W1~4

跨距: 90m 弧垂: 2m 高差: 0m 避雷线型号: GJ-80

环境温度(C°)	40	30	20	10	5	0	-10
水平张力(kN)	3.326	3.482	3.659	3.863	3.976	4.098	4.374
导线弧垂(m)	1.9	1.815	1.727	1.636	1.589	1.542	1.444

编号: ACY-W1、4

跨距: 110m 弧垂: 2m 高差: 4m 避雷线型号: GJ-80

环境温度(C°)	40	30	20	10	5	0	-10
水平张力(kN)	5.067	5.4	5.791	6.25	6.51	6.793	7.435
导线弧垂(m)	1.863	1.748	1.63	1.51	1.45	1.39	1.27

编号: ACY-W2、3

跨距: 90m 弧垂: 2m 高差: 5.8m 避雷线型号: GJ-80

环境温度(C°)	40	30	20	10	5	0	-10
水平张力(kN)	3.333	3.49	3.668	3.872	3.986	4.109	4.386
导线弧垂(m)	1.899	1.814	1.726	1.635	1.588	1.541	1.443

Reference Drawings

Drwg. No.	Title

Revisions

	Name	Date	Notes

巴基斯坦默蒂亚里—拉合尔±660kV直流输电工程

±660kV HVDC Project from Matiari to Lahore in Pakistan

NATIONAL TRANSMISSION & DESPATCH COMPANY (NTDC) LIMITED PAKISTAN

CONTRACTOR 国家电网 State Grid 中国电力技术装备有限公司 CHINA ELECTRIC POWER EQUIPMENT AND TECHNOLOGY CO.,LTD.

SUBCONTRACTOR East China Electric Power Design Institute Co.,Ltd.

拉合尔±660kV换流站

±660kV Lahore Converter Station

设计阶段 PHASE: 施工图 Detail Design

M L H V D C - L C S - E C I - D D - E C - 0 4 0 4 - 0 0 4 A

	姓名 Name	日期 Date
设计 Designed	宁雪姣	2019.04.18
校核 Checked	沉娥	2019.04.18
审核 Reviewed	郑煜	2019.04.18
批准 Approved	潘益竿	2019.04.18
比例 Scale		图号 DWG NO.

避雷线安装张力弧垂数据表
Load data of shielding wires

30-B003701S-D0404-004

版本 REV. A

420X594

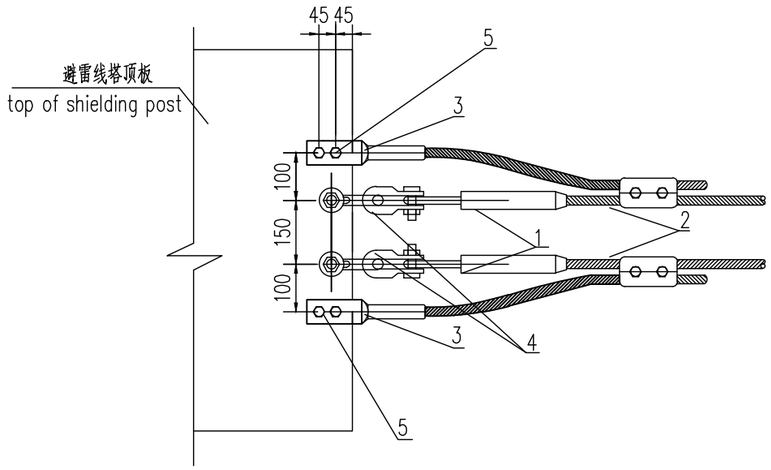

双分裂避雷线挂线详图
details of double-divided shielding wire hanging point

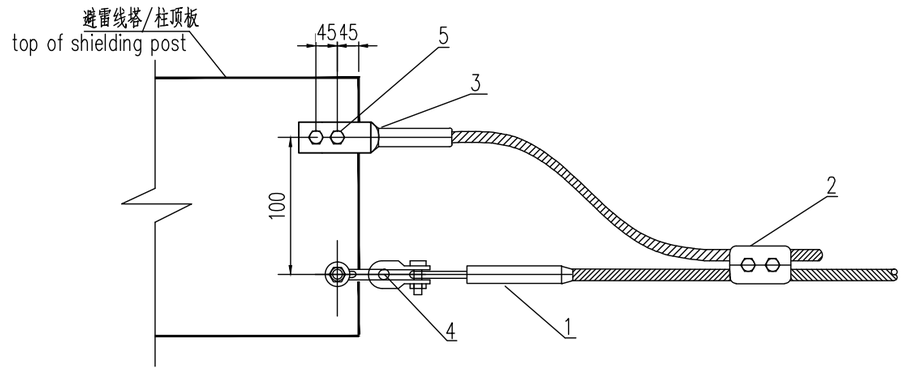

单根避雷线挂线详图
details of single shielding wire hanging point

电气A包安装单位
Electrical contractor A

编号 NO.	名称 Name	型号及规范 Type and Standard	单位 Unit	数量 Quantity	备注 Remarks
1	耐张线夹 strain clamp	NY-80G	套 set	168	
2	并沟线夹 parallel groove clamp	JBB-2	套 set	168	
3	接地线夹 grounding clamp	DG-80	套 set	168	配GJ-80，螺栓安装，位置如图所示 matching GJ-80, bolt installation, the location is shown in the figure
4	U型挂环 shackle	U-10B	套 set	336	
5	镀锌螺栓 zinc-plated bolt	M12	套 set	336	附螺母、垫片 with nut, spring washer

Reference Drawings

Drwg. No.	Title

Revisions

	Name	Date	Notes

巴基斯坦默蒂亚里—拉合尔±660kV直流输电工程
±660kV HVDC Project from Matiari to Lahore in Pakistan

NATIONAL TRANSMISSION & DESPATCH COMPANY (NTDC) LIMITED PAKISTAN

CONTRACTOR 国家电网 中国电力技术装备有限公司 CHINA ELECTRIC POWER EQUIPMENT AND TECHNOLOGY CO.,LTD.

SUBCONTRACTOR East China Electric Power Design Institute Co.,Ltd.

拉合尔±660kV换流站
±660kV Lahore Converter Station

设计阶段 PHASE: 施工图 Detail Design

M L H V D C - L C S - E C I - D D - E C - 0 4 0 4 - 0 0 5 A

	姓名 Name	日期 Date
设计 Designed	宁雪姣	2019.04.18
校核 Checked	汪斌	2019.04.18
审核 Reviewed	郑煜	2019.04.18
批准 Approved	潘益平	2019.04.18
比例 Scale	1:100	图号 DWG NO.

避雷线与避雷线塔连接详图
Details of connection between shielding wire and tower

30-B003701S-D0404-005

版本 REV. A

A3(420x297)

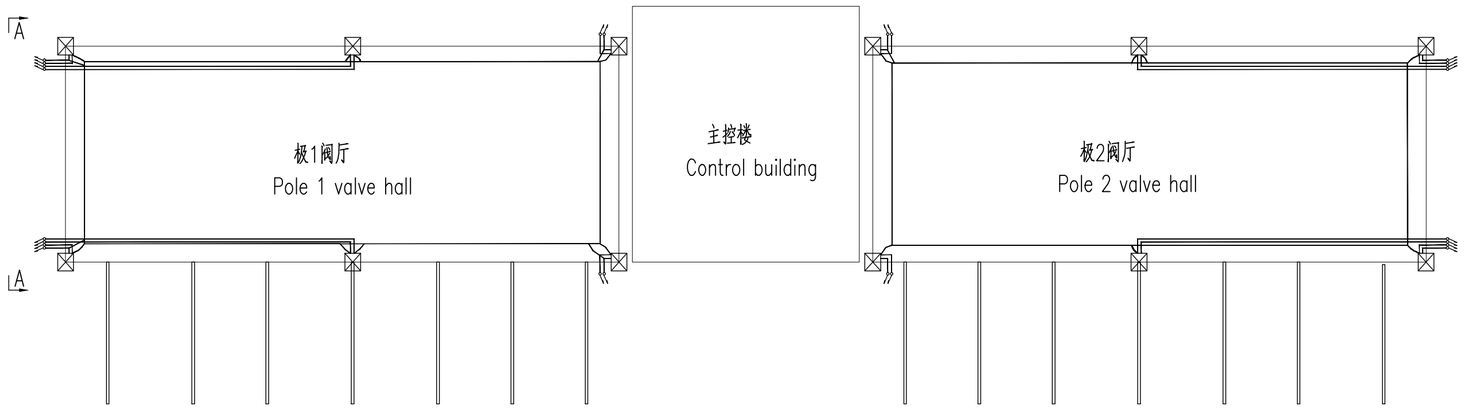

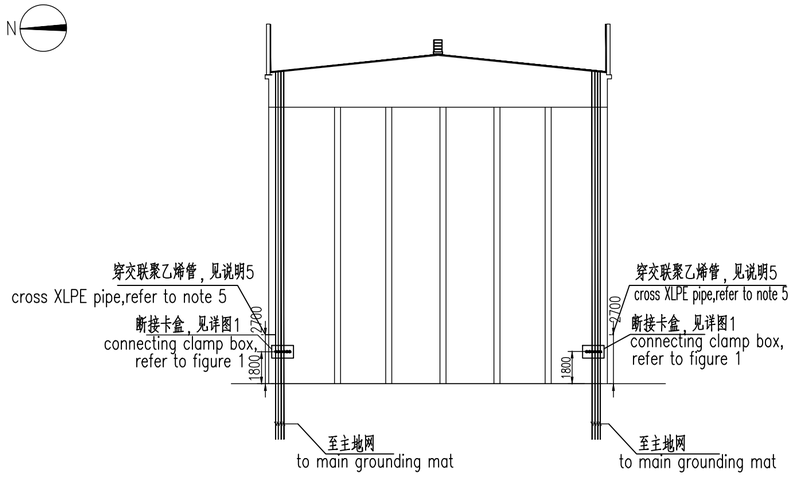

A–A断面
Plane–section A–A

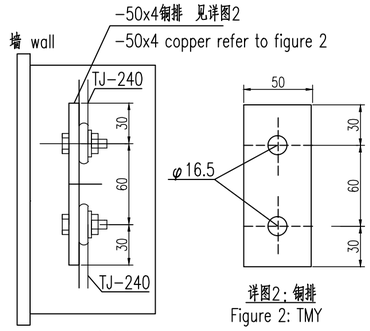

详图1：断接卡盒
Figure 1: connecting clamp box

详图2：铜排
Figure 2: TMY

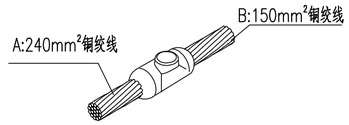

详图3:放热焊接详图
Figure 3: CADWELD

说明：
1. 阀厅上避雷线柱位于阀厅屋顶，用240mm²铜绞线沿阀厅屋顶布置一圈环屋顶接地带，具体做法见D0412卷册。
2. 每根避雷线柱从接地端子引出两根240mm²铜绞线至阀厅屋顶，并用C型线夹就近T接至阀厅屋顶接地带，具体做法见007图。
3. 避雷线柱接地引下线沿阀厅墙壁每隔0.7m用1个支撑线卡支撑，具体做法见007图；距地面1.8m处设置断接卡盒，见详图1。
4. 避雷线引下线沿墙引下与土建预留的引上点连接，引上点位置见D0411卷册，连接方式为放热焊接。
5. 阀厅避雷线引下线距地面2.7m以下部分穿3mm厚交联聚乙烯管，交联聚乙烯管应能耐受100kV冲击电压（1.2/50us波形）。

Note:
1. The shielding posts are located on the top of the valve hall, installing grounding bus along the top of the valve hall by 240 mm² copper wire, details refer to volume 0412.
2. Leading two 240 mm² copper wire to the top of valve hall, and tapped to grounding bus on the top of valve hall by C clamp, details refer to drawing 007.
3. The downlead of shielding posts are supported by support clamps every 0.7m along the wall of valve hall, details refer to drawing 007; Set a connecting clamp at 1.8m above the ground, refer to figure 1.
4. The interface: the downlead is connected to the grounding point by CADWELD, which is in the scope of electrical contractor, refer to D0411.
5. The down lead of lightning arrester in valve hall below 2.7m from the ground should cross 3mm XLPE pipe . The XLPE pipe should be able to withstand 100 kV impulse voltage (1.2/50us waveform).

电气A包安装单位
Electrical contractor

编号 NO.	名称 Name	型号及规范 Type and Standard	单位 Unit	数量 Quantity	备注 Remarks
1	镀锡铜绞线 tin–plated copper wire	240 mm²	米 m	1800	
2	铜排 TMY	50x4	米 set	3	见详图2 refer to figure 2
3	镀锡铜鼻子 tin–plated copper beezer	DT–240	个 set	120	
4	镀锌螺栓 zinc–plated bolt	M12	套 set	72	附螺母、垫片 with nut, spring washer
5	C型夹具 C clamp	240/240	个 set	24	
6	抱箍 steel hoop		个 set	200	沿避雷线柱固定铜绞线，固定间距0.7m fasten the wire along the post with the space of 0.7m
7	支撑线卡A supporting clamp A		套 set	1150	沿墙面固定铜绞线，固定间距0.7m fasten the wire along the wall with the space of 0.7m
8					
9	铅带 lead ribbon	35x1	米 m	500	包裹在线卡与铜绞线之间 covered between supporting clamp and wire
10	断接卡盒 lead ribbon		个 set	8	见详图1 refer to figure 1
11	放热焊点 CADWELD	A：240mm² 铜绞线 B：150mm² 铜绞线 A:240 mm² copper wire B:150 mm² copper wire	套 set	24	避雷线柱引下线与引上点连接，见详图3 connecting the downlead and grounding point, refer to figure 2
12	交联聚乙烯管 XLPE pipe		米 m	72	阀厅避雷线引下线距地面2.7m一下部分穿3mm厚交联聚乙烯管 the down lead of lightning arrester in valve hall below 2.7m from the ground should cross 3mm XLPE pipe

Reference Drawings

Drwg. No.	Title

Revisions

	Name	Date	Notes

巴基斯坦默蒂亚里—拉合尔±660kV直流输电工程
±660kV HVDC Project from Matiari to Lahore in Pakistan

NATIONAL TRANSMISSION & DESPATCH COMPANY (NTDC) LIMITED PAKISTAN

CONTRACTOR 国家电网 State Grid 中国电力技术装备有限公司 CHINA ELECTRIC POWER EQUIPMENT AND TECHNOLOGY CO.,LTD.

SUBCONTRACTOR East China Electric Power Design Institute Co.,Ltd.

拉合尔±660kV换流站
±660kV Lahore Converter Station

设计阶段 PHASE: 施工图 Detail Design

M L H V D C - L C S - E C I - D D - E C - 0 4 0 4 - 0 0 6 A

	姓名 Name	日期 Date
设计 Designed	宁雷波	2019.04.18
校核 Checked	汪斌	2019.04.18
审核 Reviewed	郑煜	2019.04.18
批准 Approved	潘益平	2019.04.18

阀厅避雷线柱接地布置图
Grounding of shielding posts on valve hall

比例 Scale: 1:100
图号 DWG NO.: 30-B003701S-D0404-006
版本 REV.: A

420X594

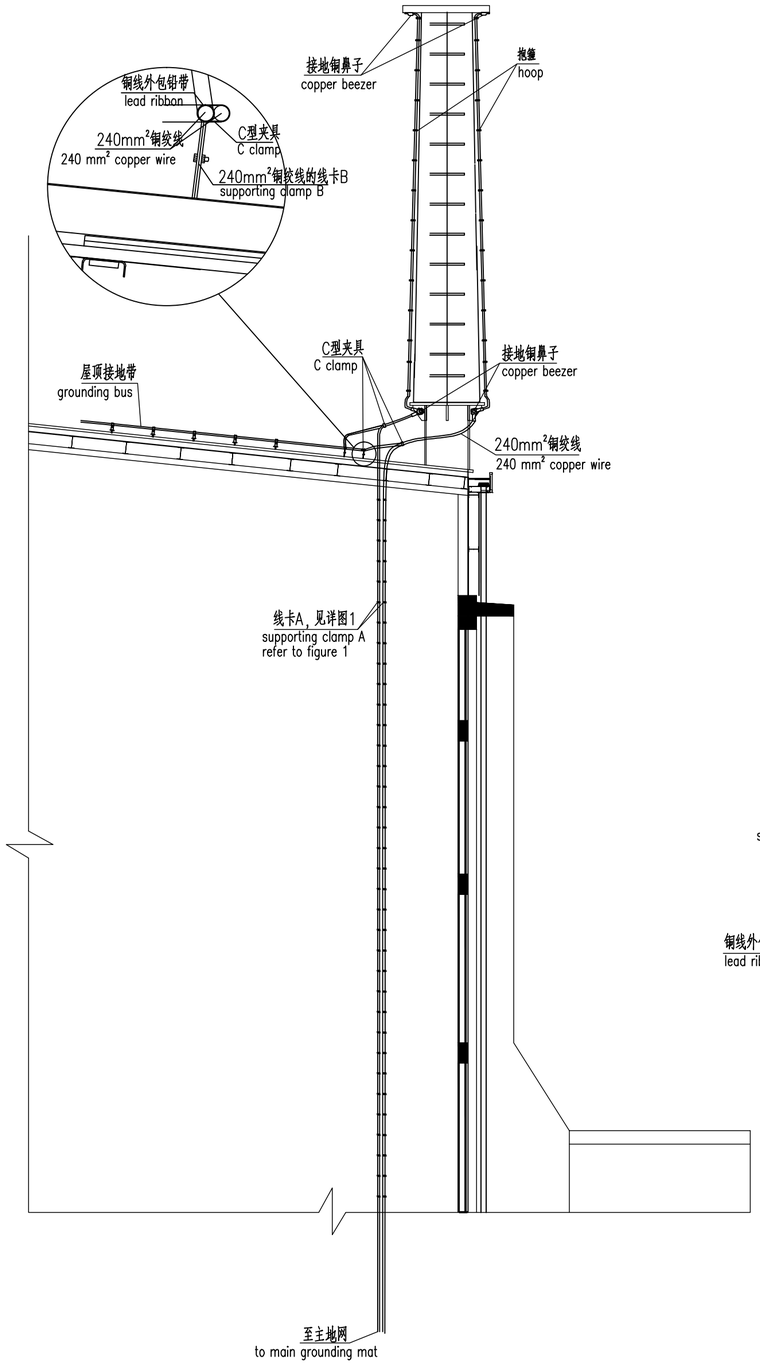

阀厅避雷柱的接地
grounding of shielding post on valve hall

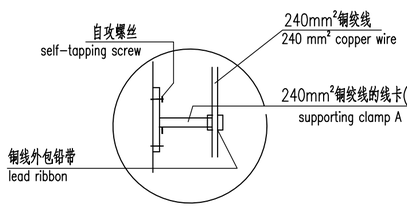

240mm²铜绞线在外墙上安装
fixed copper wire on outer wall

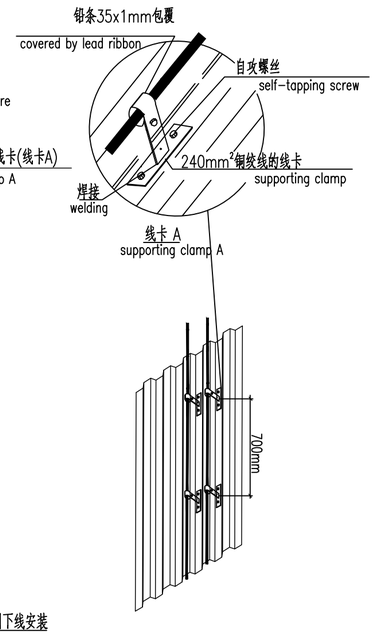

详图1：沿墙防雷引下线安装
Figure 1: installation of downlead along the wall

Reference Drawings	
Drwg. No.	Title

Revisions			
	Name	Date	Notes

巴基斯坦默蒂亚里—拉合尔±660kV直流输电工程
±660kV HVDC Project from Matiari to Lahore in Pakistan

NATIONAL TRANSMISSION & DESPATCH COMPANY (NTDC) LIMITED PAKISTAN

CONTRACTOR
国家电网 STATE GRID
中国电力技术装备有限公司
CHINA ELECTRIC POWER EQUIPMENT AND TECHNOLOGY CO.,LTD.

SUBCONTRACTOR
East China Electric Power Design Institute Co.,Ltd.

拉合尔±660kV换流站
±660kV Lahore Converter Station

设计阶段 PHASE: 施工图 Detail Design

M L H V D C - L C S - E C I - D D - E C - 0 4 0 4 - 0 0 7 A

	姓名 Name	日期 Date
设计 Designed	宁雪姣	2019.04.18
校核 Checked	沉城	2019.04.18
审核 Reviewed	郑煜	2019.04.18
批准 Approved	潘益年	2019.04.18
比例 Scale		图号 DWG NO.

阀厅防雷接地详图
Details of lightning protection and grounding of valve hall

30-B003701S-D0404-007

版本 REV. A

420X594

电气A包安装单位
Electrical contractor A

编号 NO.	名称 Name	型号及规范 Type and Standard	单位 Unit	数量 Quantity	备注 Remarks
1	避雷线 shielding wire	GJ-80	米 m	5500	甲供 provided by proprietor
2	双分裂间隔棒 double-divided spacer	MRJ-（配合GJ-80导线）/150	套 set	360	甲供 provided by proprietor
3	耐张线夹 strain clamp	NY-80G	套 set	168	甲供 provided by proprietor
4	并沟线夹 parallel groove clamp	JBB-2	套 set	168	甲供 provided by proprietor
5	接地线夹 grounding clamp	DG-80	套 set	168	甲供 provided by proprietor
6	U型挂环 shackle	U-10B	套 set	336	甲供 provided by proprietor
7	镀锌螺栓 zinc-plated bolt	M12	套 set	408	乙供 provided by builder
8	镀锡铜绞线 tin-plated copper wire	240mm^2	米 m	1800	乙供 provided by builder
9	铜排 TMY	50x4	米 m	3	乙供 provided by builder
10	镀锡铜鼻子 tin-plated copper beezer	DT-240	个 set	120	乙供 provided by builder
11	C型夹具 C clamp	240/240	个 set	24	乙供 provided by builder
12	抱箍 steel hoop		个 set	200	乙供 provided by builder
13	支撑线卡A supporting clamp A		套 set	1150	乙供 provided by builder
14	铅带 lead ribbon	35x1	米 m	500	乙供 provided by builder
15	断接卡盒 lead ribbon		个 set	8	乙供 provided by builder
16	放热焊点 CADWELD	A：240mm^{2}铜绞线 B：150mm^{2}铜绞线 A:240 mm^2 copper wire B:150 mm^2 copper wire	套 set	24	乙供 provided by builder
17	交联聚乙烯管 XLPE pipe		米 m	72	乙供 provided by builder

Reference Drawings

Drwg. No.	Title

Revisions

Name	Date	Notes

巴基斯坦默蒂亚里—拉合尔±660kV直流输电工程
±660kV HVDC Project from Matiari to Lahore in Pakistan

NATIONAL TRANSMISSION & DESPATCH COMPANY (NTDC) LIMITED PAKISTAN

CONTRACTOR 国家电网 State Grid 中国电力技术装备有限公司 CHINA ELECTRIC POWER EQUIPMENT AND TECHNOLOGY CO.,LTD.

SUBCONTRACTOR East China Electric Power Design Institute Co.,Ltd.

拉合尔±660kV换流站
±660kV Lahore Converter Station

设计阶段 PHASE: 施工图 Detail Design

M L H V D C - L C S - E C I - D D - E C - 0 4 0 4 - 0 0 8 A

	姓名 Name	日期 Date
设计 Designed	宁贤俊	2019.04.18
校核 Checked	沈斌	2019.04.18
审核 Reviewed	郑煜	2019.04.18
批准 Approved	潘益竿	2019.04.18
比例 Scale		图号 DWG NO.

材料汇总表
Tables of material

30-B003701S-D0404-008

版本 REV. A

A3(420x297)